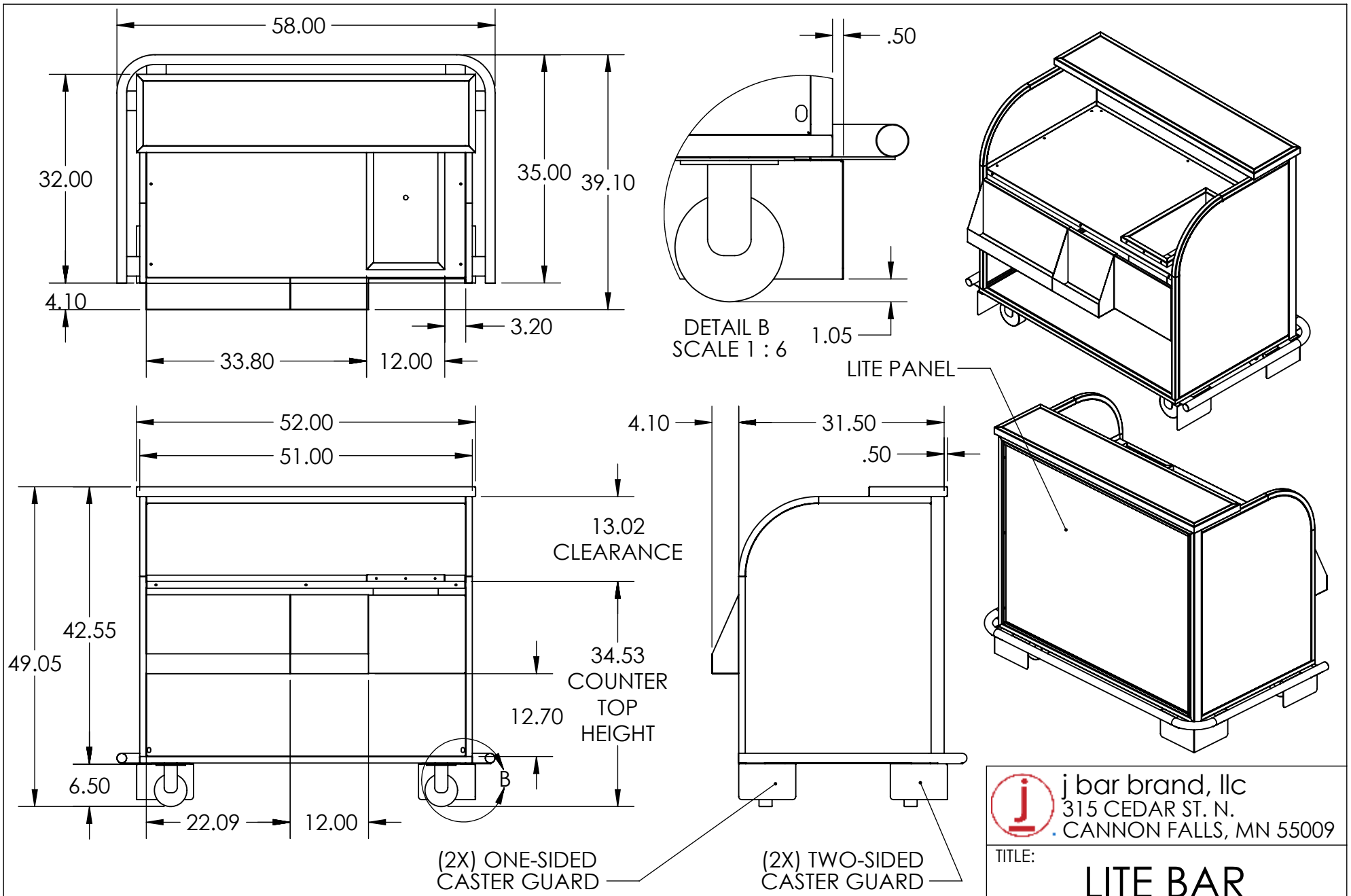

j bar brand, llc
315 CEDAR ST. N.
CANNON FALLS, MN 55009

TITLE:

LITE BAR
ASSEMBLY

SIZE	DWG. NO.	REV
A	BB2005	
SCALE: 1:20		SHEET 1 OF 1

PROPRIETARY AND CONFIDENTIAL
THE INFORMATION CONTAINED IN THIS DRAWING IS THE SOLE PROPERTY OF j bar brand, llc.
ANY REPRODUCTION IN PART OR AS A WHOLE WITHOUT THE WRITTEN PERMISSION OF j bar brand, llc. IS PROHIBITED.